RobLight

99080046
01-06-2021
Rev. 1.1

Mounting instruktion for item: 03101224, 03101264, 03101274

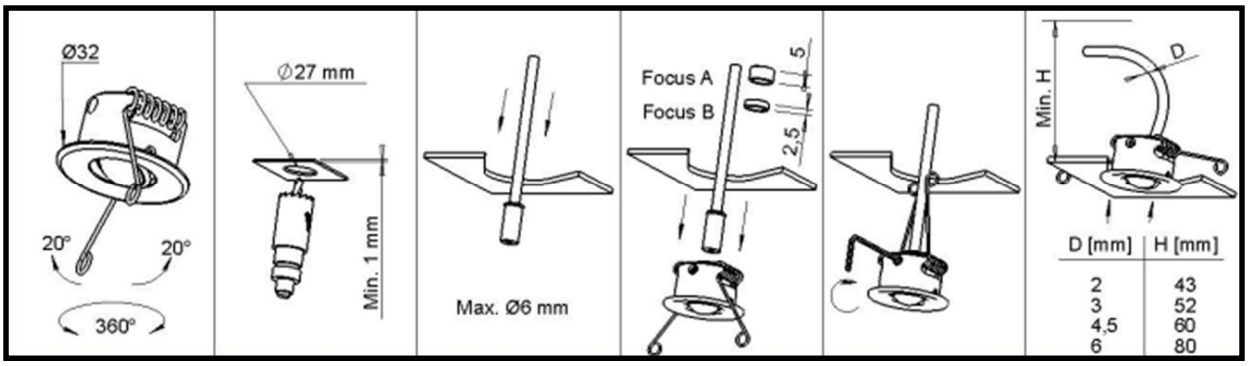

RobLight A/S, Nordhavnsvej 1A, DK-9900 Frederikshavn, T: +45 9244 4888, E: info@rob-light.com, www.rob-light.com

RobLight

99080046
01-06-2021
Rev. 1.1

Mounting instruktion for item: 03101224, 03101264, 03101274

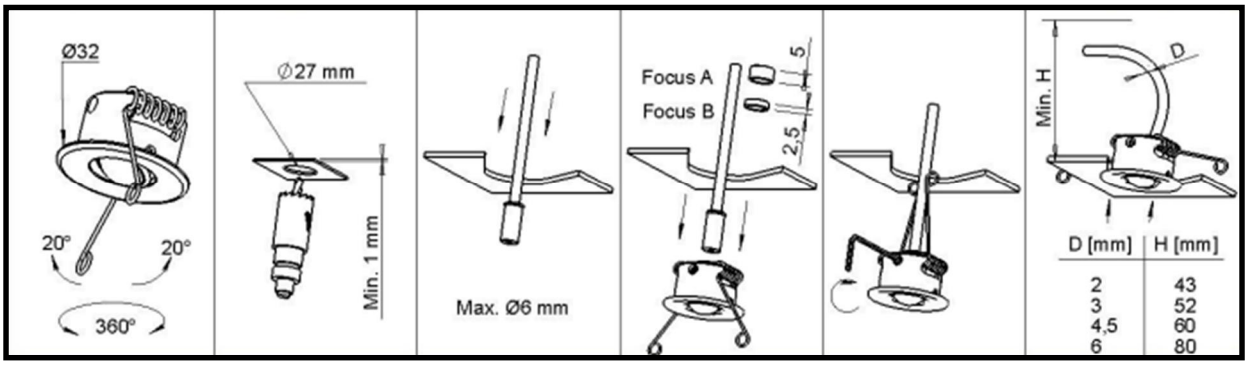

RobLight A/S, Nordhavnsvej 1A, DK-9900 Frederikshavn, T: +45 9244 4888, E: info@rob-light.com, www.rob-light.com

RobLight

99080046
01-06-2021
Rev. 1.1

Mounting instruktion for item: 03101224, 03101264, 03101274

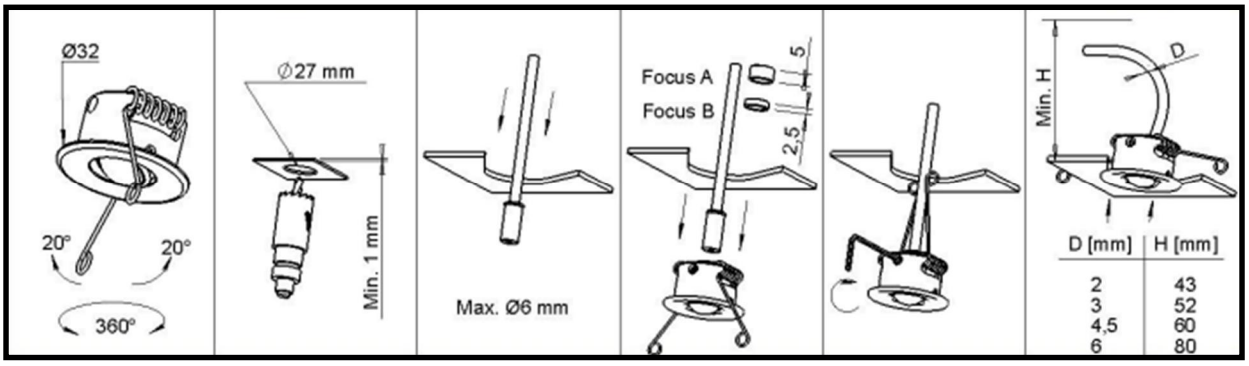

RobLight A/S, Nordhavnsvej 1A, DK-9900 Frederikshavn, T: +45 9244 4888, E: info@rob-light.com, www.rob-light.com

RobLight

99080046
01-06-2021
Rev. 1.1

Mounting instruktion for item: 03101224, 03101264, 03101274

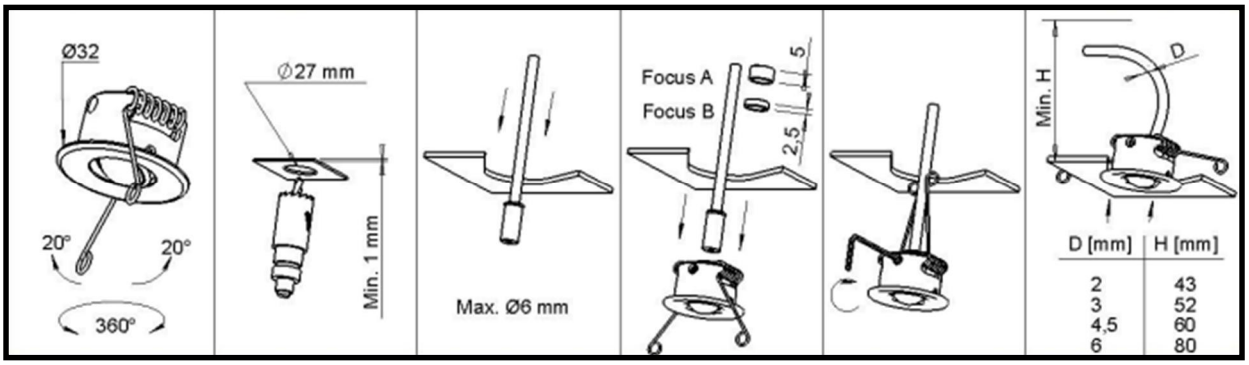

RobLight A/S, Nordhavnsvej 1A, DK-9900 Frederikshavn, T: +45 9244 4888, E: info@rob-light.com, www.rob-light.com